STANDARD
(Center Drain shown)

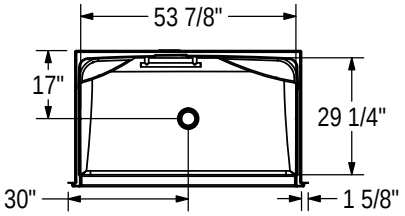


STANDARD
(Left shown)

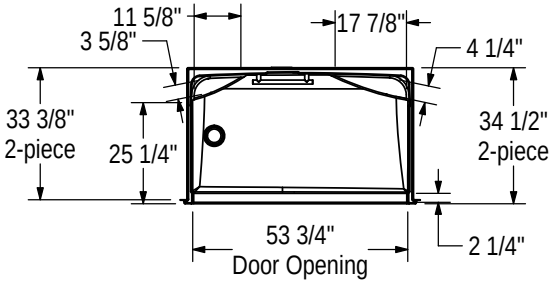


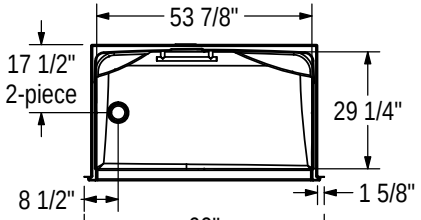


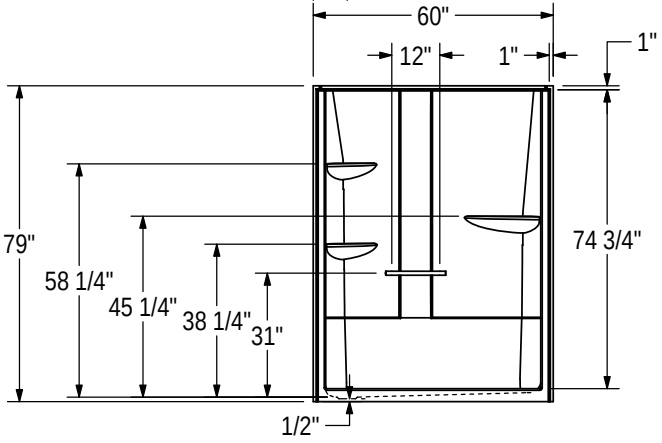


**All dimensions are approximate. Structure measurements must be verified against the unit to ensure proper fit.**

SEAT
(Left drain shown)

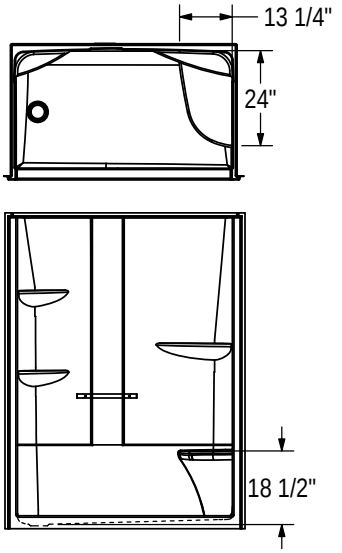

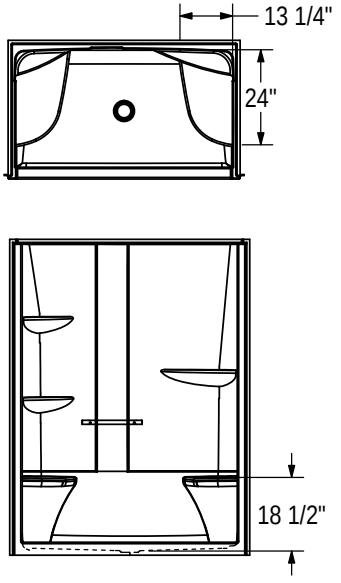
SEAT
(Center drain shown)